PAN-WAY™ RSCERT-KIT

INSTALLATION INSTRUCTIONS

©Panduit Corp. 1998

Made in U.S.A.

1.

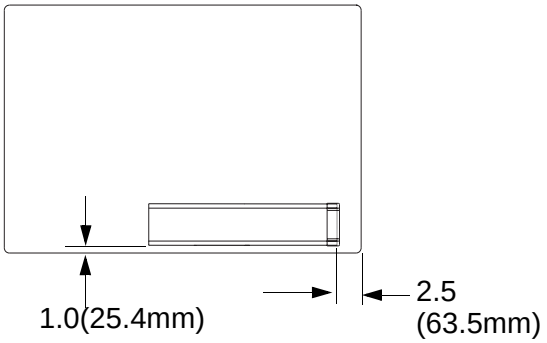

2.

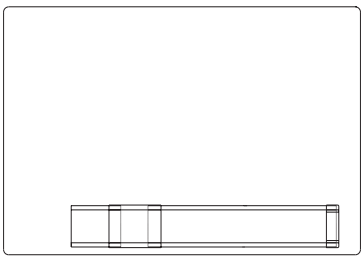

3.

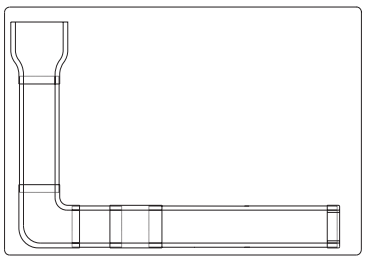

4.

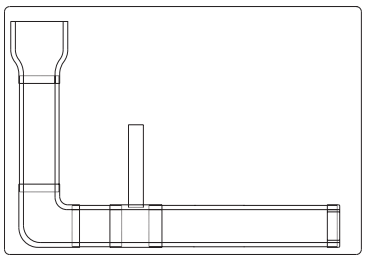

5.

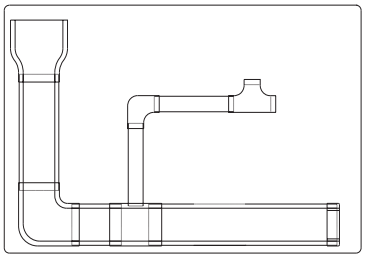

6.

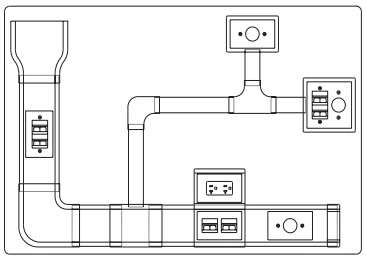

PARTS LIST

QTY	P/N
1	T70EEIW
1	T70RAIW
1	T70TRIW
1	T70ECIW
1	T70DB
1	T70HB3
1	T70WC2IW
1	T70BH2IW
1	T70PGIW
1	CBIW

QTY	P/N
12	CJ588
6	CHS2IW
1	FP1BIW
1	FP2BCIW
1	RAFX10IW
1	TFXD10IW
1	JBP1IW
1	JBP2DIW
1	JBD2
1	ID-98283901

QTY	P/N
1	T70BIW19.00
1	T70BIW5.0
1	T70BIW11.25
3	T70CIW3.0
1	T70DW2.0
1	T70DW5.0
1	T70DW11.0
2	LD2P10IW8IN-A
2	LD2P10IW3.5-A
36	P63W2R1-1X1-6

QTY	P/N
1	2X3 BOARD
1	T70DW11.25
2	T70CIW3.375

For Technical Assistance, Call: 888-506-5400, ext. 8287

RSCERT-KIT

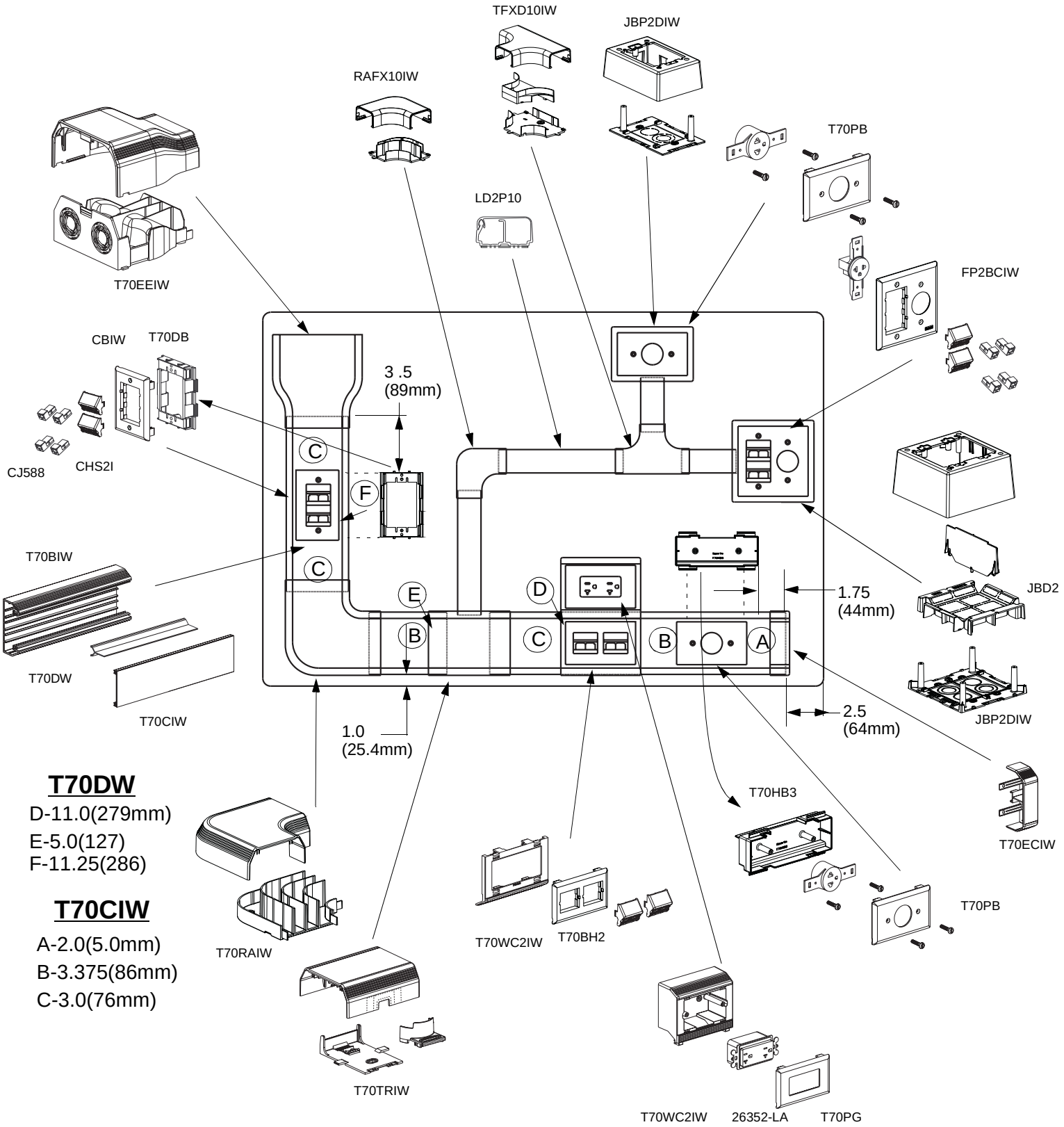

T70DW

D-11.0(279mm)
E-5.0(127)
F-11.25(286)

T70CIW

A-2.0(5.0mm)
B-3.375(86mm)
C-3.0(76mm)

PANDUIT®
QUALITY
RACEWAY SYSTEMS DIVISION

17301 Ridgeland Avenue
Tinley Park, IL 60477-3091
Phone: 888-506-5400, Ext. 8287
FAX: 815-836-1811
WORLDWIDE SUBSIDIARIES AND SALES OFFICES